- Electricity as a source of light and heat energy:

  Electricity is a practical means of transforming energy to the desired form in which it is needed.

- Electric potential:
  - Electric potential is the amount of work done (energy spent) in moving a unit positive charge from infinity to a given point in an electric field.

$$V = \frac{W}{Q}$$

    Electric potential is measured in volts.

  - When one-coulomb electric charge (6.25×10^{18} electrons) is brought from infinity to a given point in an electric field, such that work done is one joule. The electric potential at that point is one volt.

- Quantity of electric charge:
  - The number of charges (electrons) which drift from higher to a lower potential is called the quantity of charge (Q).

    The electric charge is measured in coulombs (C).

  - The quantity of electric charge which will deposit 0.00118 g of silver on the cathode, when passed through silver nitrate solution, is called one coulomb.

- Electric current:
  - The rate of flow of charge in an electrical circuit is called electric current (I).

$$I = \frac{Q}{t}$$

  The unit of electric current is Ampere (A).

  - When one-coulomb charge flows through an electric circuit in one second, the current flowing through the circuit is said to be one ampere.

$$1 \text{ Amnere } = \frac{1 \text{ coulomb}}{1 \text{ second}}$$

  - Relation between current, number of electrons flowing through an electric circuit and time:

$$I = \frac{ne^{-}}{t}$$

- The continuous drift of electrons through the body of a solid conductor constitutes the current.
- The simultaneous movement and discharge of positive and negative ions in the opposite directions constitute the current in liquids.

➢ Potential difference:

- The potential difference is the amount of work done in moving a unit charge from one point to another in an electric field.

$$V = \frac{W}{Q}$$

The potential difference is measured in volts.

- When one joule of work is done in moving 1 coulomb of charge from one point to another point in an electric field, then the potential difference between these points is one volt.

➢ Electric circuit:

- A continuous conducting path between the terminals of a source of electricity (such as a cell or a battery) is called an electric circuit.
- Open electric circuit:
  An electric circuit in which the flow of current stops because of an open switch is called an open electric circuit.
- Closed electric circuit:
  An electric circuit in which a current flows continuously because the switch is closed is called a closed electric circuit.

➢ Electrical Resistance:

The opposition or obstruction offered by a conductor to the passage of drifting electrons is called electric resistance.

Resistance is measured in ohms (Ω)

➢ Electrical conductance:

- The reciprocal of electrical resistance is called electrical conductance.

$$\text{Conductance} = \frac{1}{\text{Resistance}}$$

The unit of electrical conductance is $(\text{ohm})^{-1}$

- Superconductors:

  The particular temperature at which the resistance of a conductor becomes zero, i.e. it does not offer any resistance to the passage of electric current, is called critical temperature. The phenomenon is called superconductivity, and the conductor itself is called a superconductor.

➢ Laws of Resistance:

1 The resistance of a conductor depends upon its nature.

2 Law of length:

The resistance of a conductor is directly proportional to its length.

$$R \propto l$$

3 Law of the area of cross-section:

The resistance of a conductor is inversely proportional to its area of cross-section.

$R \propto \frac{l}{a}$ or $R = \rho \frac{l}{a}$

Where ρ is a constant of proportionality and is called the specific resistance or resistivity.

4 Specific Resistance:

The resistance offered by a conductor of unit length (1 cm or 1 m) and unit area of cross-section. The current enters and leaves the conductor from its opposite ends.

Units of specific Resistance:

In the CGS system, a unit of specific resistance is ohm centimeter (Ωcm) In SI system, the unit of specific resistance is ohmmeter (Ωm)

➢ Relation between the resistance of a material and the temperature:

- Increase in resistance with the temperature rise.

  Resistance of conductors made from a pure metal rises with the temperature rise.

- Very little or no change in resistance with a temperature rise.

  In the case of metallic alloys, the resistance does not increase with the temperature rise, i.e., an increase in resistance is not appreciable.

- Decrease in resistance with the temperature rise.

  Resistance of carbon filament bulb falls with the temperature rise.

➢ Series circuit:

- When several resistors are connected end to end, such that the tail of one resistor is connected to the initial end of another resistor to form a closed electric circuit, then such a circuit is called a series circuit.

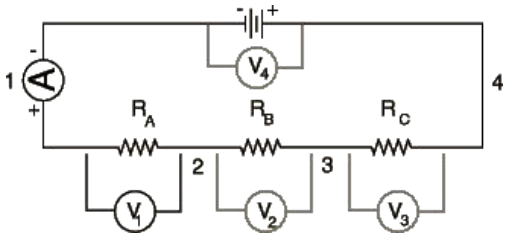

➢ Characteristics of a series circuit:

1 The current flowing in a series circuit remains the same in all the elements of the circuit (resistors, ammeter, etc.)

2 There is a continuous drop in potential all along in a series circuit and the potential difference increases.

3 If V is the total drop in potential (potential difference across all resistors) and V_1, V_2 and V_3 are the individual drop-in potentials across the ends of the resistors, then

$$V = V_1 + V_2 + V_3$$

➢ Parallel circuit:

When the number of resistors is connected so that they have common positive and common negative terminals, the resistors are said to be connected in parallel.

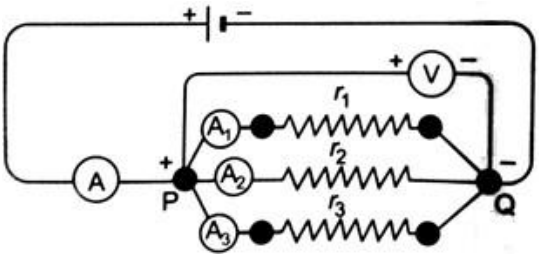

➢ Characteristic of the parallel circuit:

1 The potential difference for all the resistors in a parallel circuit is a constant quantity.

2 The current divide in a parallel circuit in the inverse ratio of the resistances of a given circuit. It means more the resistance; less is the current flowing through the resistor.

3 The total current entering or leaving the parallel circuit equals the sum of all the currents flowing in the individual resistors. If I is the total current in a circuit and I_1, I_2, I_3 are the currents in the individual resistors, then

$$I = I_1 + I_2 + I_3$$

- Ohm's law:
  - All physical conditions of a conductor remain the same. The current flowing through it is directly proportional to the potential difference at its ends.

$$V \propto I \text{ or } V = I.R$$

  - When a unit current flows through a resistor, then the resistance of the resistor is numerically equal to the potential difference at its ends.
- Resistance in series:

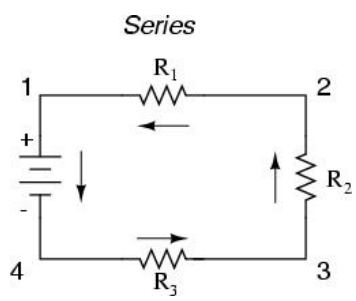

1 The total resistance in a series circuit is equal to the total of individual resistances of all the resistors connected in series

$$\text{i.e. } R_S = R_1 + R_2 + R_3 + \ldots$$

2 The total resistance in a series circuit is always more than any of the individual resistances in the series circuit.

- Resistance in parallel:

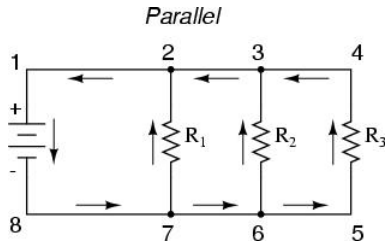

$$R_p = \frac{R}{n}$$

1 The reciprocal of the total resistance in a parallel circuit equals the total of the reciprocals of individual resistance in the parallel circuit.

$$\text{ie} \cdot \frac{1}{R_p} = \frac{1}{R_1^+} \frac{1}{R_2} \frac{1}{R_3}$$

2 The total resistance in a parallel circuit is always less than any of the individual resistance in parallel.

- E.MF and internal resistance of a cell:
  - Electromotive force:
    The total difference in electrical potential between the terminals of a cell when it is not doing any external work is called electromotive force (e.m.f) (E)
  - Internal Resistance:
    (i) It is inversely proportional to the surface area of the electrodes in contact with the electrolytes.
    (ii) It is directly proportional to the distance between the electrodes of the cell.
    (iii) It depends upon the
    (a) Nature
    (b) Concentration
    (c) Temperature of electrolytes

$$\text{Internal resistance} = \frac{\text{Ext. Res} \times \text{drop in potential across the terminals of the cell}}{\text{P. D across ext. Resistance}}$$

$$r = \frac{E - V}{I}$$

- Drop-in potential at the terminals of a cell is the product of current drawn from the cell and the cell's internal resistance.
- If a large current is drawn from a cell, i.e. external resistance is low, then the drop in potential is very large.

- The terminal voltage of a cell:

When current is drawn from a cell, i.e., the cell is in a closed electric circuit, the

potential differences between the electrodes (terminals) of the cell are called terminal voltage.